bhoksi

Cardboard Dirt & Rocks Pack

Print it

1. Print every page at 100% / "Actual size" (no "fit to page"). 9 pages on A3.
2. Check the 50 mm square measures exactly 50 mm.
3. Tape the pages together using the corner marks (page order is printed on each page).

Build it

1. Press out all 18 pieces. Crease every fold line.
2. Fold each piece's two sides up and wrap the strip round them, gluing every tab inside as you go.
3. Glue the last flap shut: a closed lump is much stronger than an open one. Let them dry.
4. Fill the TLB's front bucket with three clods, the backhoe with one, and the Tipper Truck with the lot.

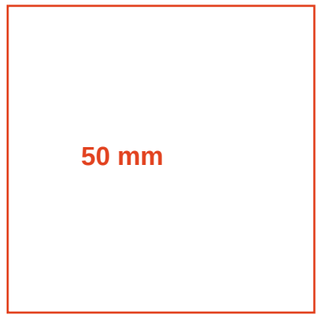

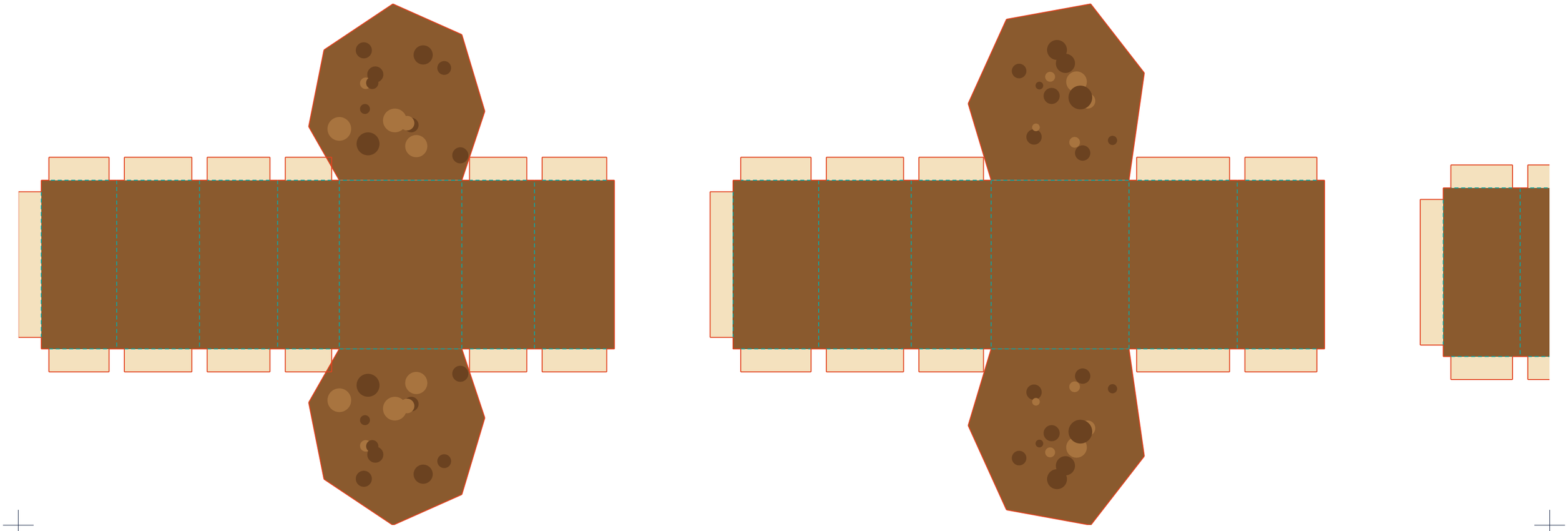

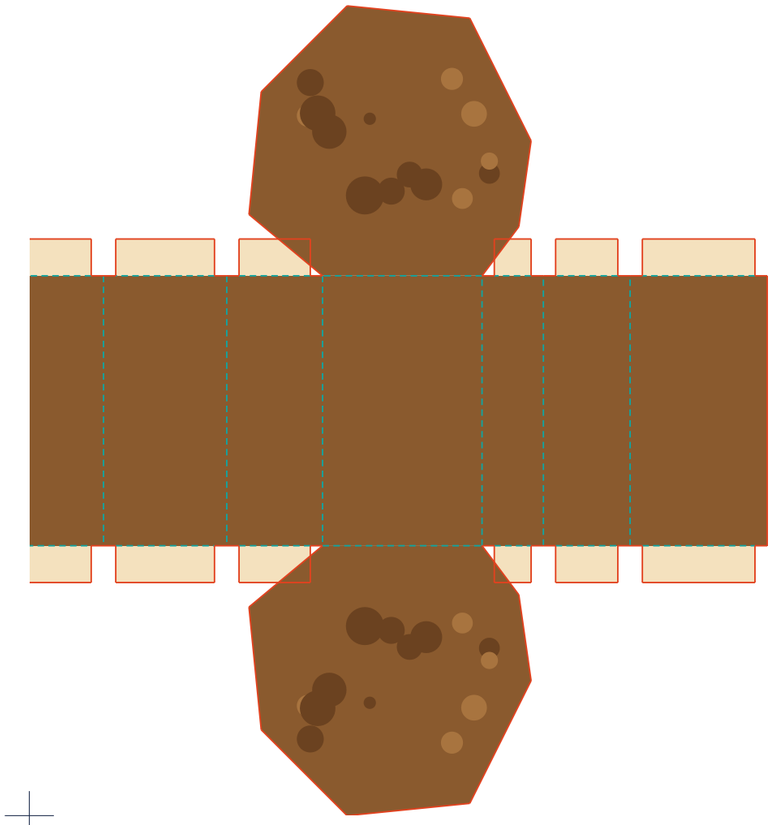

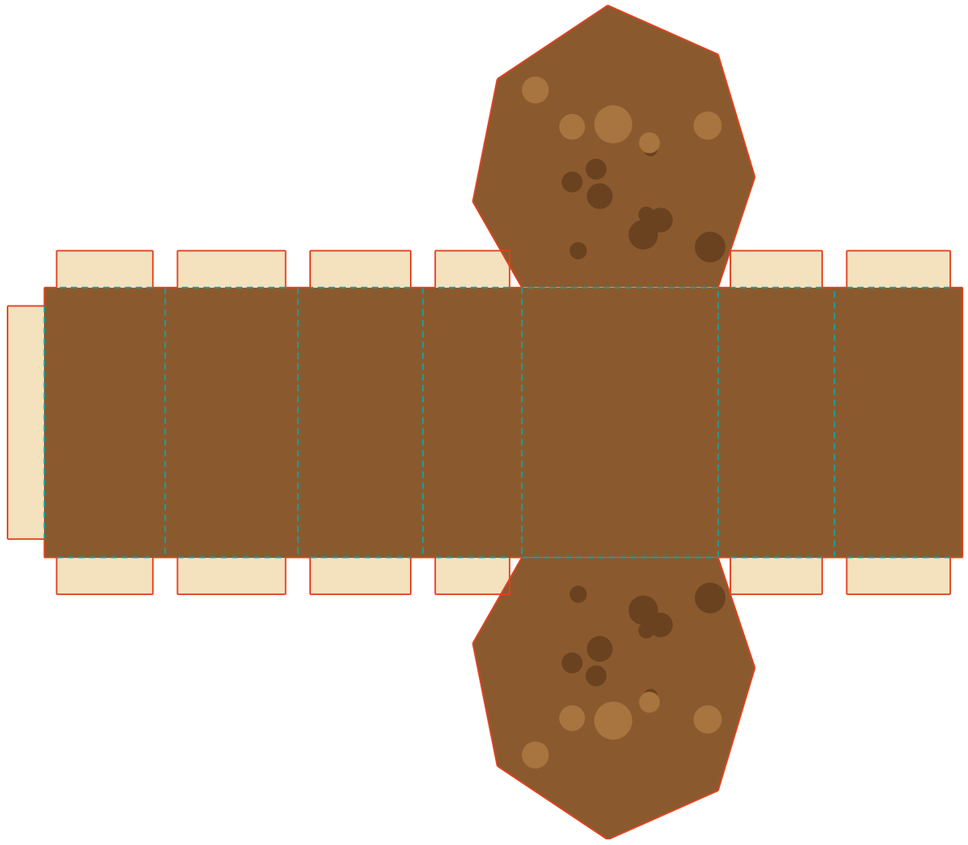

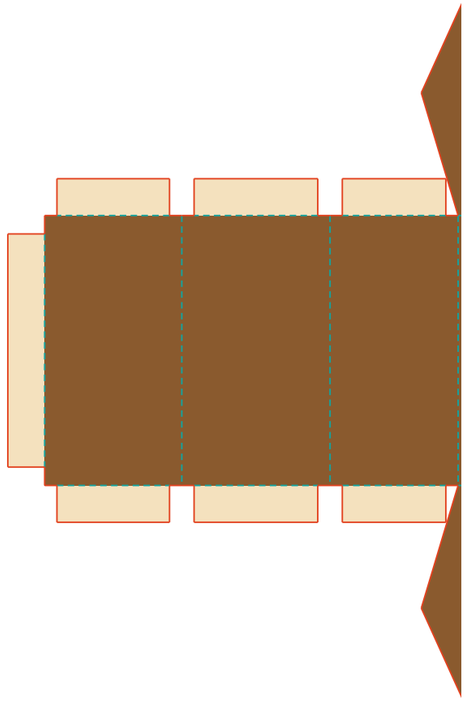

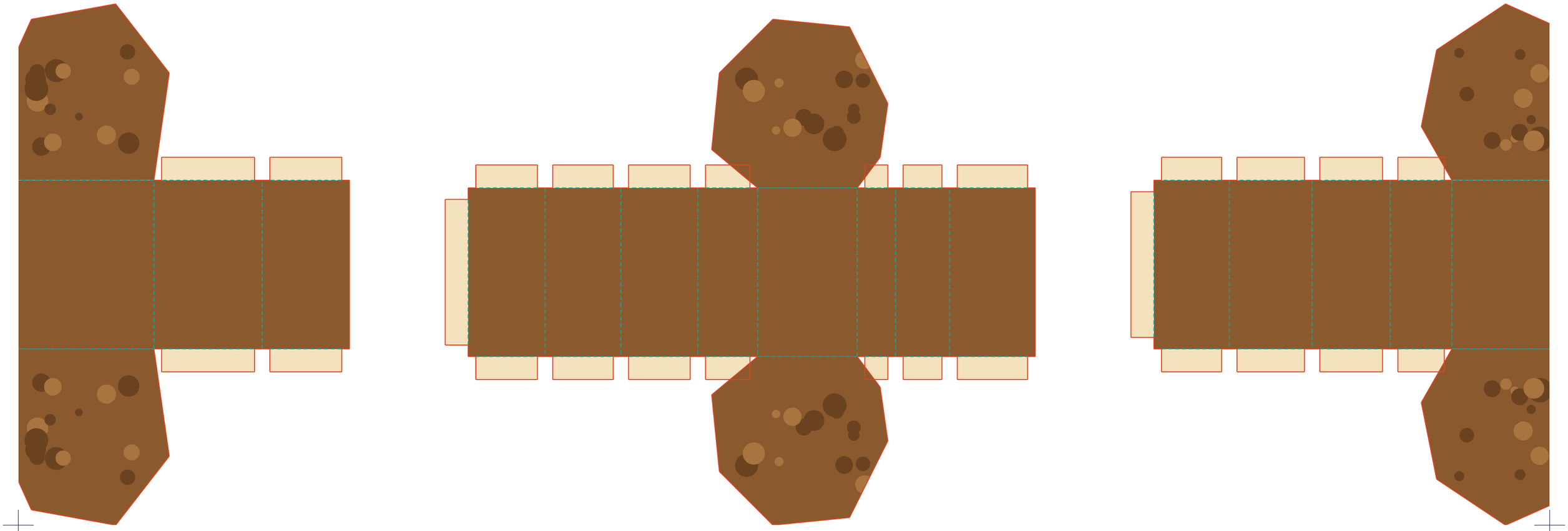

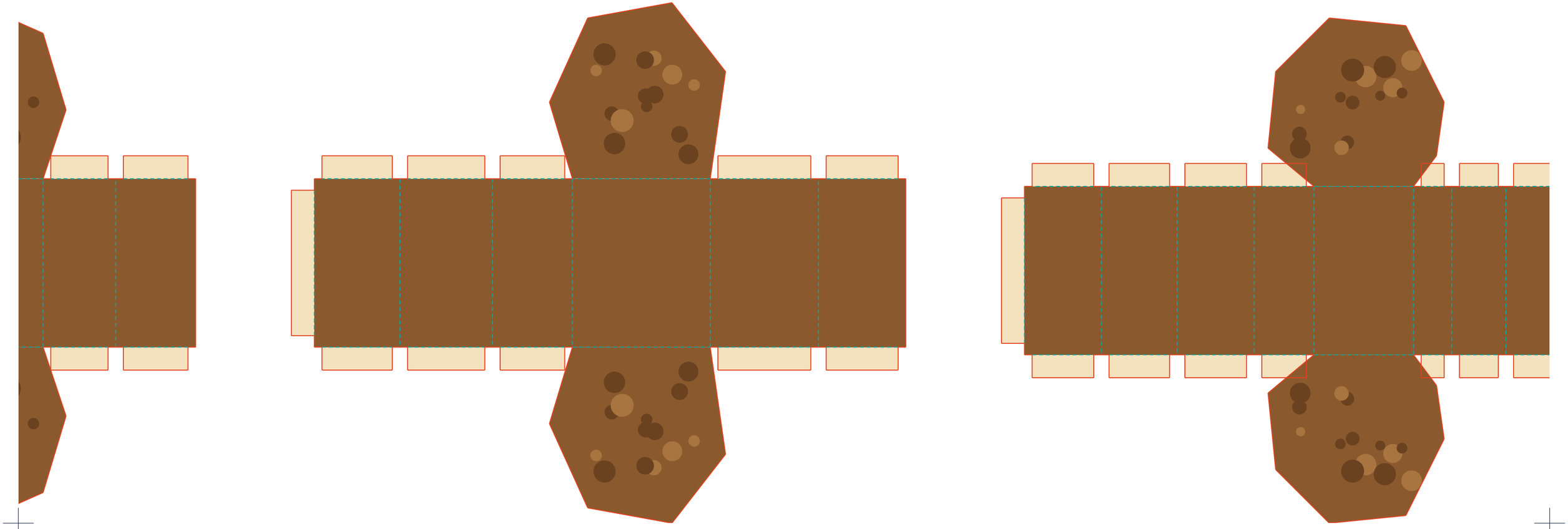

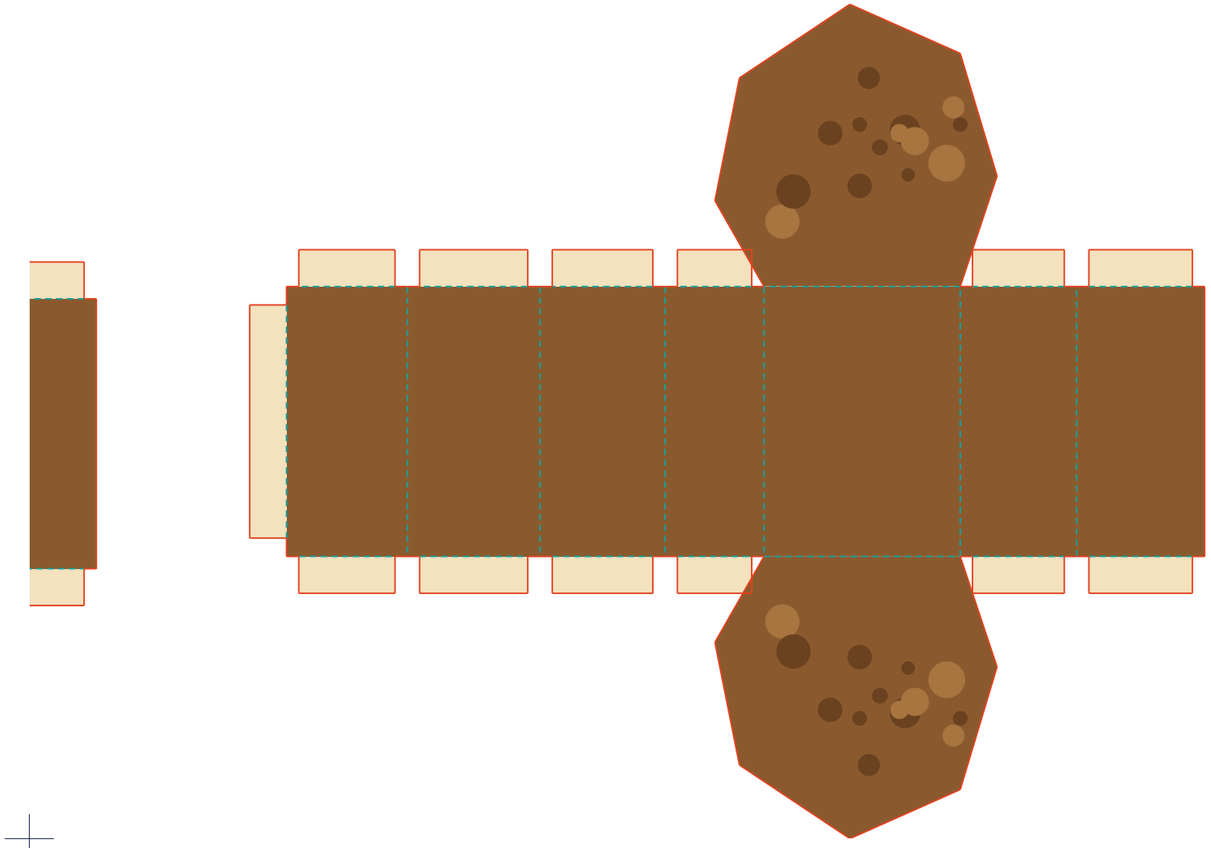

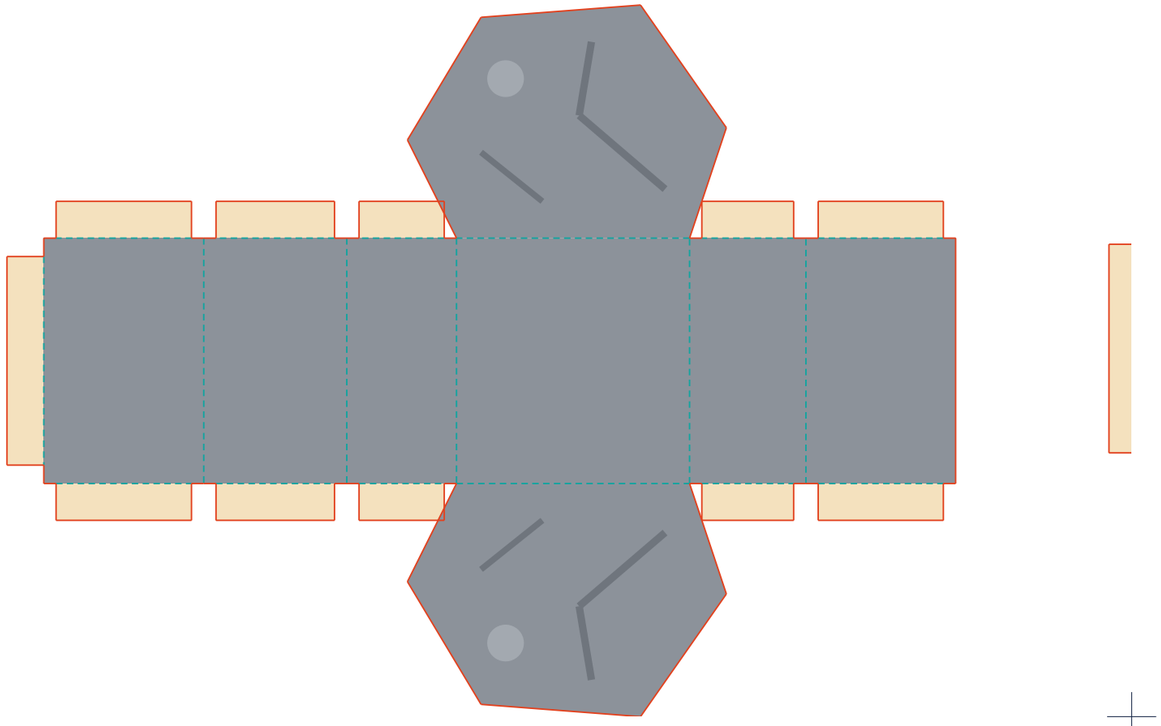

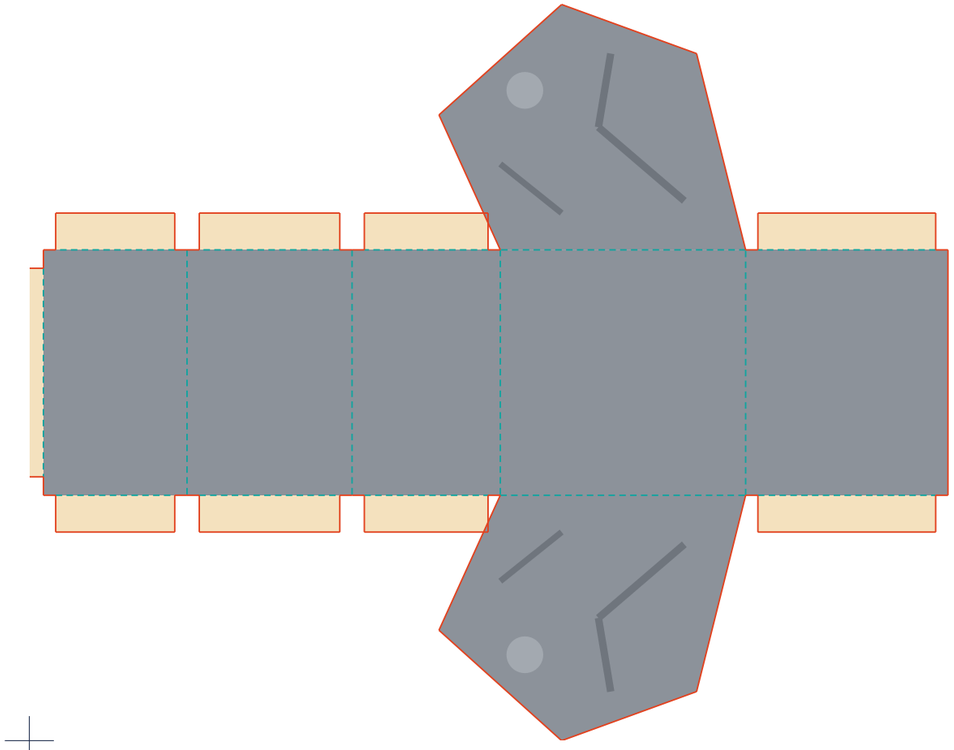

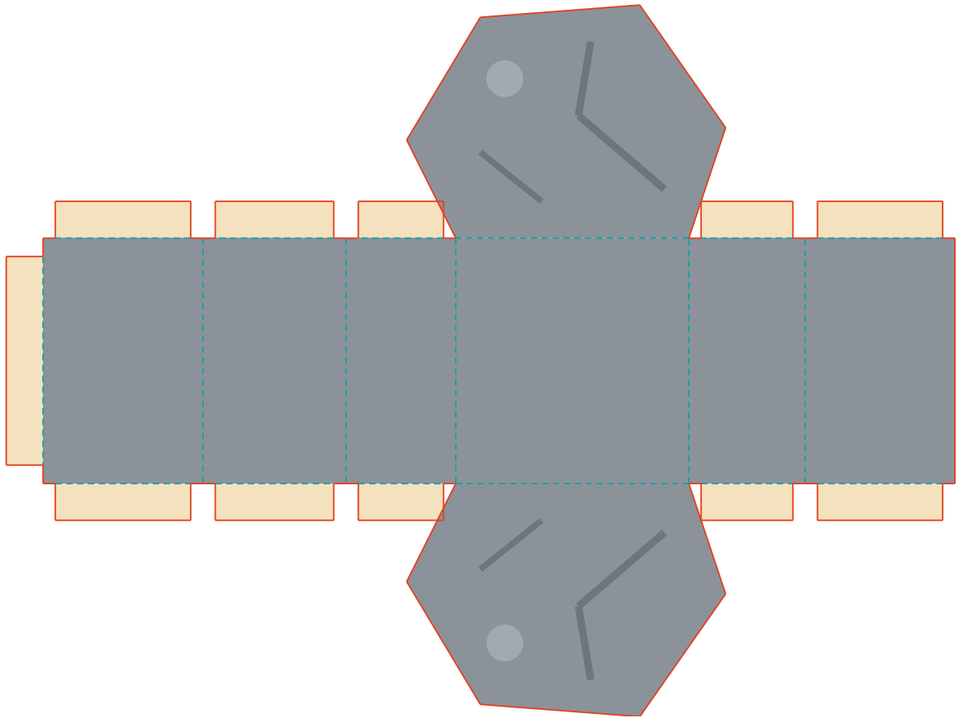

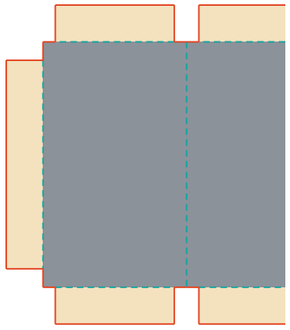

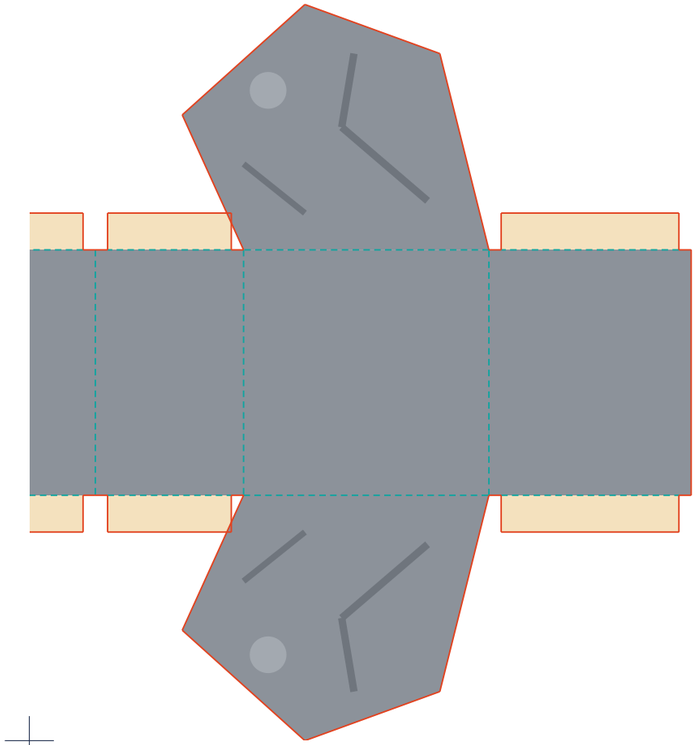

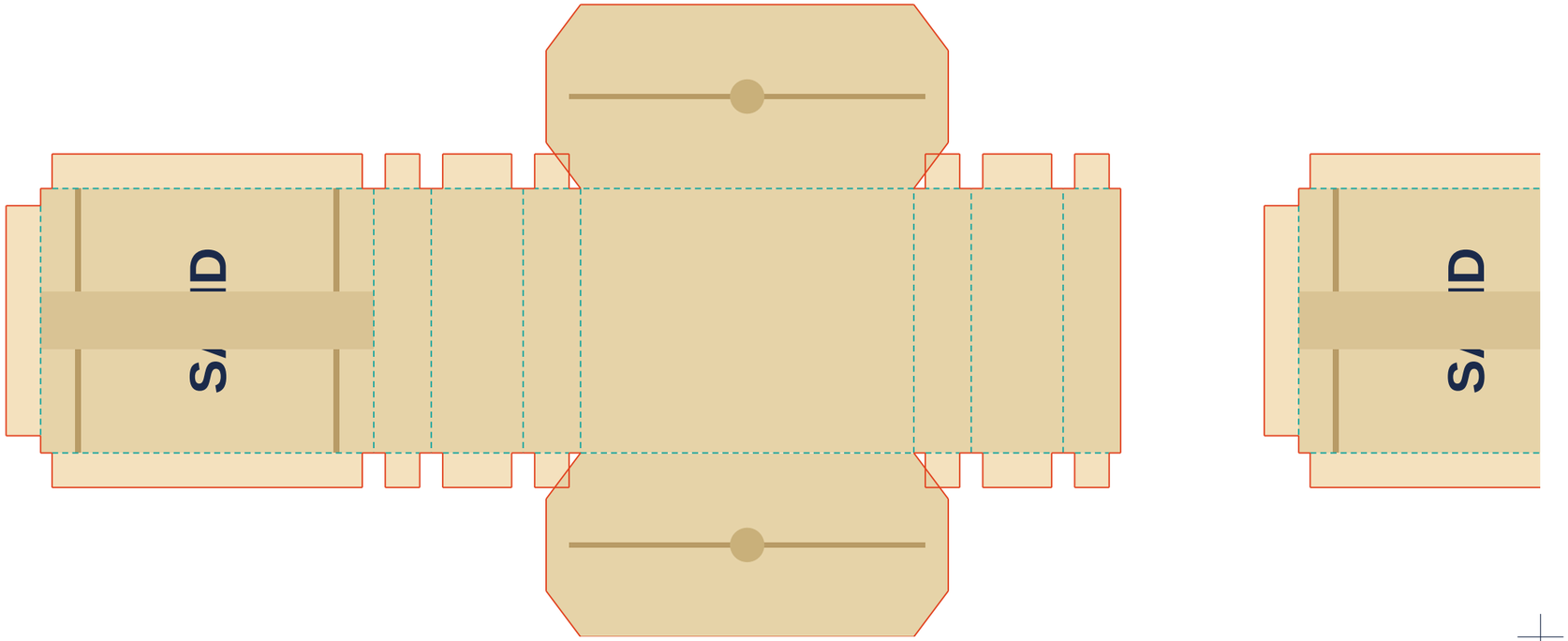
SIDE
SIDE

